Assembly instructions for the CS-1 ribbon wire harness.

Harness Rev. 12.06.12

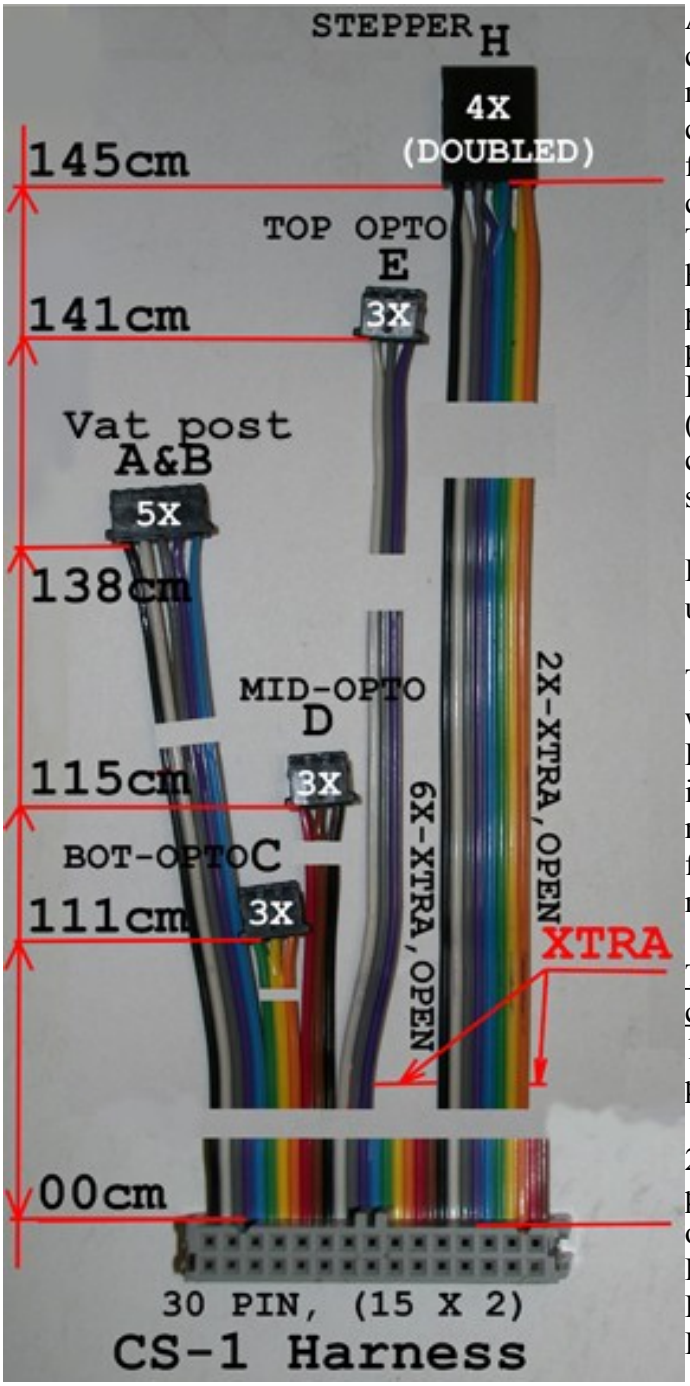

All the electronics in the CS-1 3D printer is connected to sub harnesses that branch from one main 30 way ribbon cable. It keeps it simple, clean , and most important , there is continuity from the shield all the way through to each main component.
The 30way ribbon cable is divided into sub harnesses. A, B, C, D, E, F, G and H. (See picture) Each sub-harness will end in a 2mm pitch IDC (Insulation displacement connectors) . Harness H has a crimp end terminal connector (pitch = 2.54mm) , the wires are doubled and crimped onto terminals for more amperage to the stepper coils.

Harness F, G and wires # 29 and # 30 are not used and is Xtra/ optional for future development.

The 30 way Ribbon cable (1.5m long.) comes with the main 30 position IDC (Insulation Displacement Connector) header already installed. Because the CS-1 is based on a modular design the 1.5m ribbon length will allow for about 300mm extension in the telescopic main column if needed.

<u>The harness kit comes with the following components:</u>
1) 1.5m Rainbow ribbon cable with the main 30 position header attached.

2) Three 3 position IDC connectors @ (2mm pitch) for harness C, D & E. they plug into the opto interrupt PCB's. (Not Included)
Harness E => top PC board named “CS-1T”
Harness D => middle “CS-1M”
Harness C => bottom “CS-1B”

3) One 5 position IDC connector @ 2mm pitch .This one plugs into the vat post PC Board . Harness A & B is combined into one 5 position header => Vat post PC brd “CS-1V”

4) Stepper motor connector with 4 crimp terminals.=>small PCB pin header (panel mount) on top cover

Assembly instructions for the 30 way Ribbon harness:

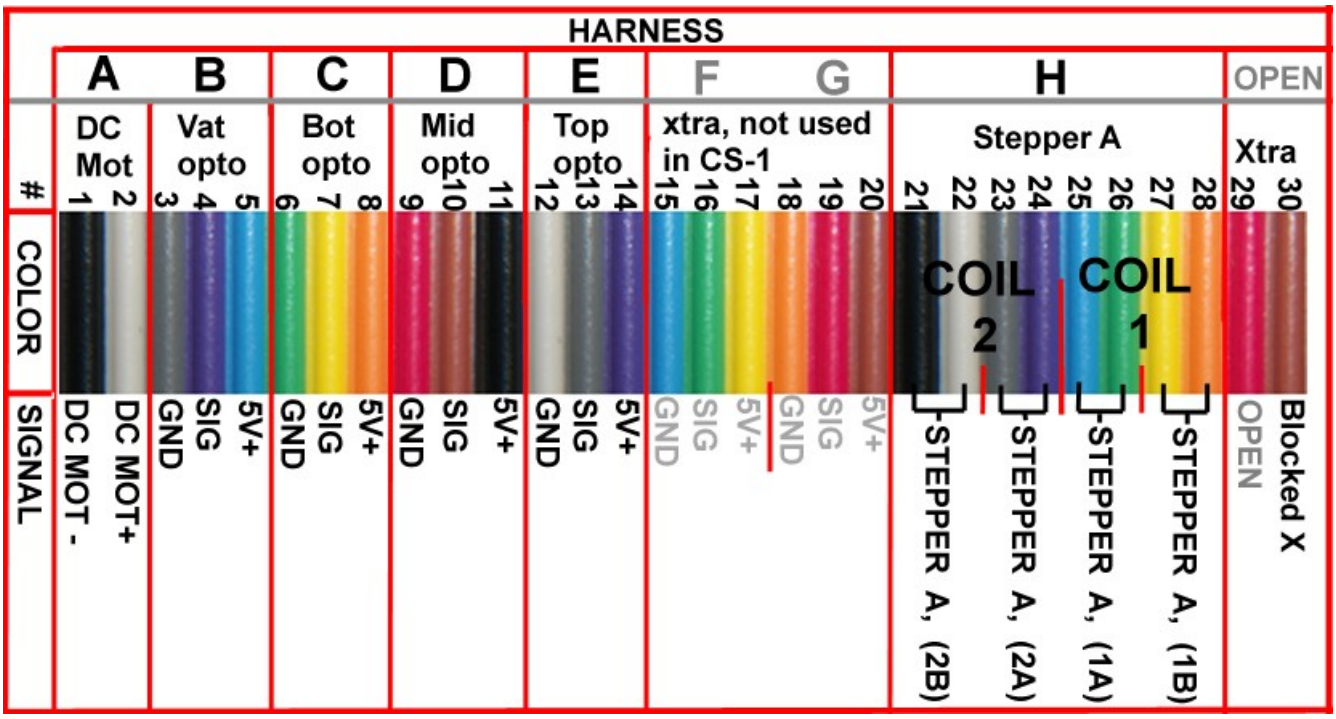

1)PREPERATION

The ribbon cable is covered with a skin of clear plastic insulation. This protects and keep the 30 wires together. To separate the ribbon , you tear the clear skin between the wires you want to separate . It's a lot easier to separate the strands when the whole cable is straightened out and flat.

Start by removing the " rolled up curved memory " in the ribbon cable by gently pulling and squeezing between the index finger and thumb until it is smooth and straight. Bend it slightly in the opposing direction. Do this while the cable is laying on a flat table surface. The heat and friction from your hand will help. If it is really cold , heat up with a hair dryer for a few seconds to relax the curl.

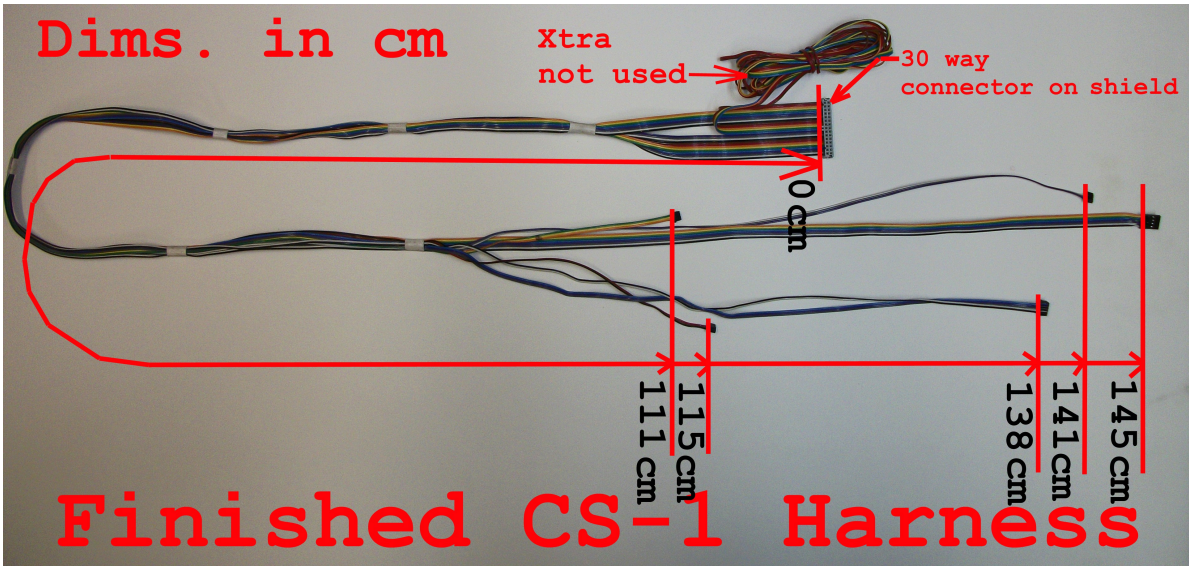

2-)**The (5x) wire harness A & B for the vat post. Wires # 1 to # 5**

Harness A (2-Wire) and B (3-wire)goes to one IDC connecter so keep them together. Isolate the 5 wire harness for the vat post by separating the ribbon cable between the blue # 5 and green wire #6 . Place the ribbon cable end on a piece of wood or thick cardboard. Push a sharp knife tip between the 2 strands to be separated about 5mm (1/4") from the end. Now just pull the ribbon cable out away from the knife. This will give you a nice 5mm clean cut to start the tear.
NOTE:Do not cut the or separate the wire strands with a knife for the full length of the harness, there is too much risk in cutting into the insulation. Tear apart by hand.
Grab one side (blue) right next to the cut between thumb and index finger with the right hand and the other side (green) next to the cut in the left hand. Facing the ribbon at its full width,pull with the right hand going away from you and the left hand coming towards you. This way you actually shear the two wires sideways to get a clean tear. Tear off all the way until about 15cm from the main (30x) position connector.

3-)The (3x) wire harness C for the Bottom opto interrupt.
Repeat the procedure to isolate harness C. Separate the orange wire # 8 and Red wire # 9 with a knife for the first 5mm and tear off the rest to about 15cm from the main connector.

4-) Do the same for harnesses D,E,F,G and H, separate between the colors as shown in the illustrations. There will be 2 wires #29 AND #30 (brown and red) left over.

5-)After separating into the sub-harnesses lay the whole cable flat and straight onto a flat surface. Measure in centimeters and mark the length of each harness with a black marker or pen. Measure the lengths as taken from above pictures for each harness.

6)Use electrical insulation tape and bind only the used the harnesses all together at roughly every 15cm intervals .Tape the last one at 93cm from the main connector. This makes it easy to to thread the harness into the main column.
The unused harnesses F,G and wires # 29 and # 30 are not currently used in the CS-1. If you want ,you can cut them off , or a better suggestion is to just coil them up,tie them together and lay them inside the case on the floor so they won't get caught on stuff .

7-) Inserting wires into the IDC connectors. (3 and 5 position connectors)

Insulation displacement connectors works just like the name describes it. The connector displaces the plastic insulation with a forked V-groove terminal by cutting through the plastic to make contact with the internal wire strands. It is wedged in a very slightly tapered metal groove in the terminal. Quick fast and simple and beats any solder job. No need to strip the insulation at ends of the wires ,just press it straight into the terminal groove and the connector does the job for you.

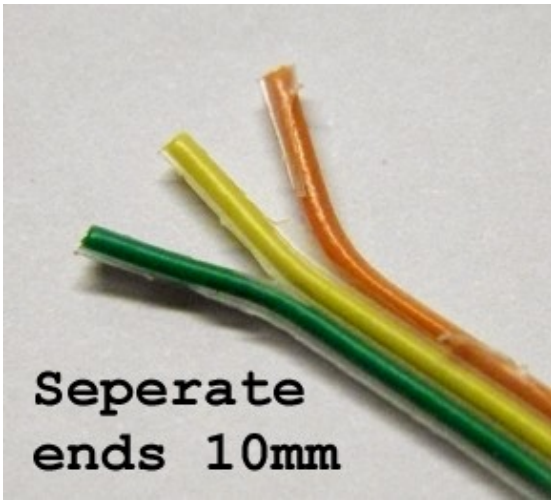

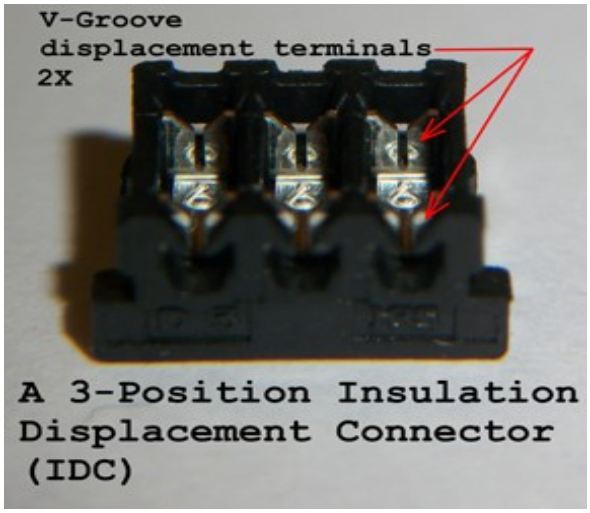

Once the required length have been cut, separate each strand to about 10mm from the end.

Start with the middle ones first. Look at the connector from the side to see how deep the wire should be inserted for displacement (See picture below.) .

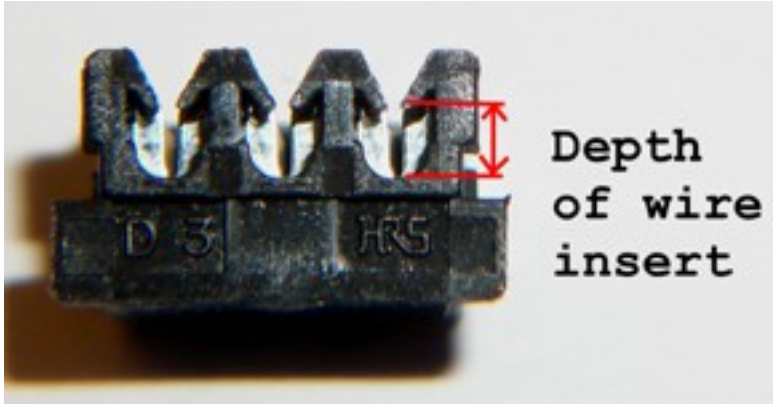

Lay the wire on the two inline forked V-terminals. Push gently in with a the back (not the sharp edge!) of a “break-off knife” blade by pressing right in the middle of the wire.. Take great care to not push too hard. It should go in with little force. Don't damage the plastic insulation with the back of the knife. Slowly work it into the two metal terminal's v-grooves (See picture below) .Make sure it goes all the way down to bottom .Each wire terminal has two inline metal v-grooves that makes for for a very secure fastening and contact. The blade I used is only 0.3mm thick. A wooden toothpick can also get the job done but takes a little longer. Other things to use is a old credit card or similar type of plastic.

NOTE:

Don't use a blade that is to thick. The blade should fit in between the groove opening of the metal terminal. Test it to see if it fits before pushing in the wires ,otherwise it will widen the fork gap and fail to make a connection onto the wire strands.

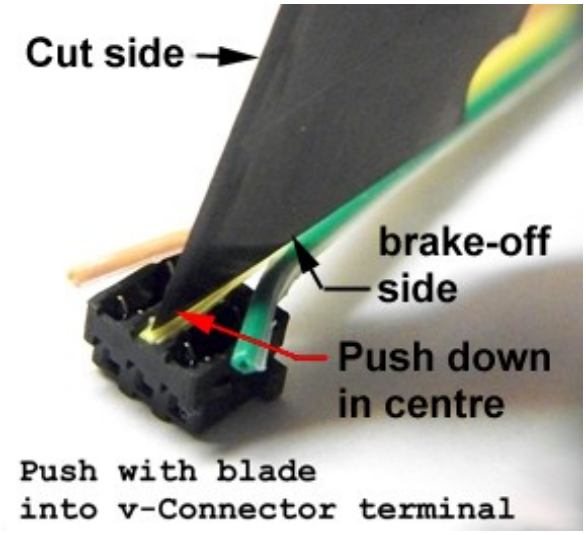

Do this with all the wires, and complete the IDC connector.
Make sure the orientation for signals and voltages are correct.
See pictures below.

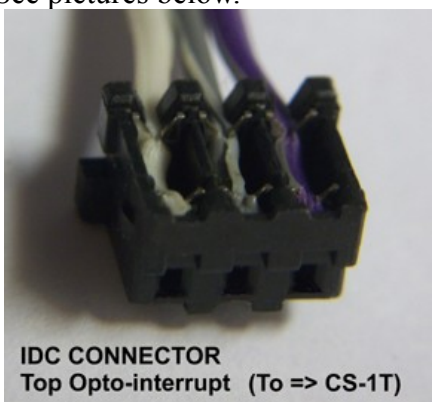

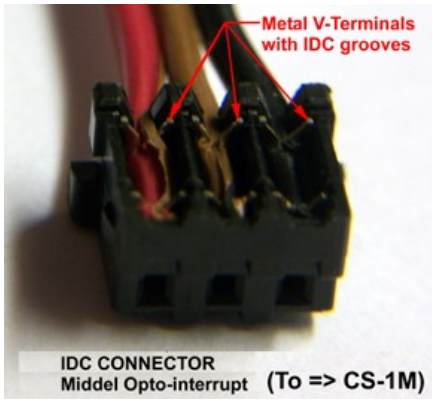

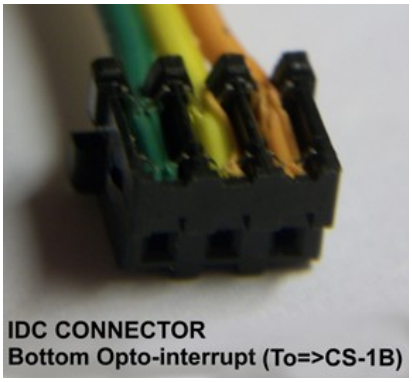

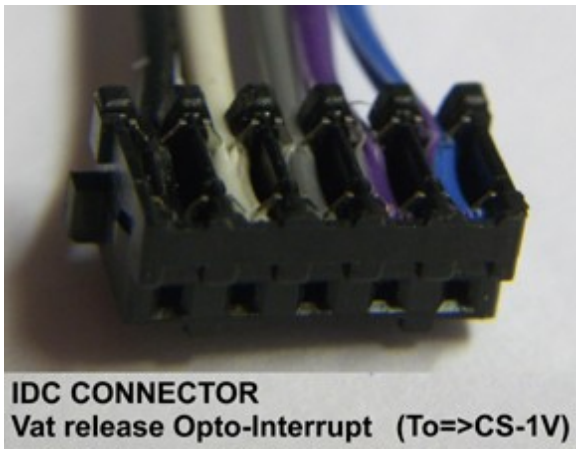

8) The Crimp inline connector for the Stepper motor, Harness H

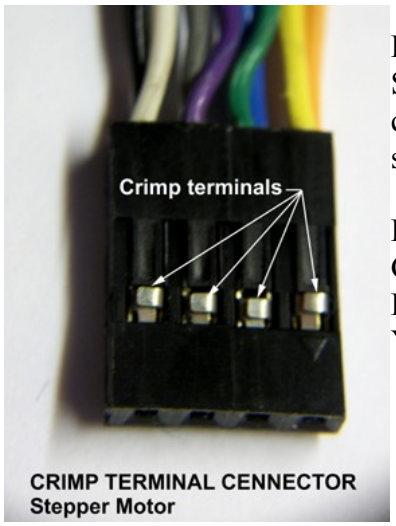

Double up these sets of wires to get a higher amps rating for the motor. See harness illustration above on page 2 for the wire numbers and color codes for the stepper motor. Strip about 10mm of the pair, twist and solder together . Crimp into one terminal. See illustration below:

Black and White together
Grey and Purple together.
Blue and green together
Yellow and Orange together

Keep the round shape of the terminals and don't squeeze it too flat so it won't fit in the plastic housing. Crimp them on tight and make sure there is good contact .

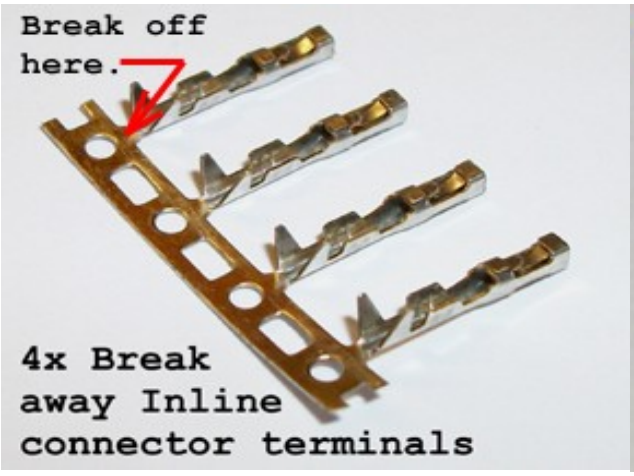

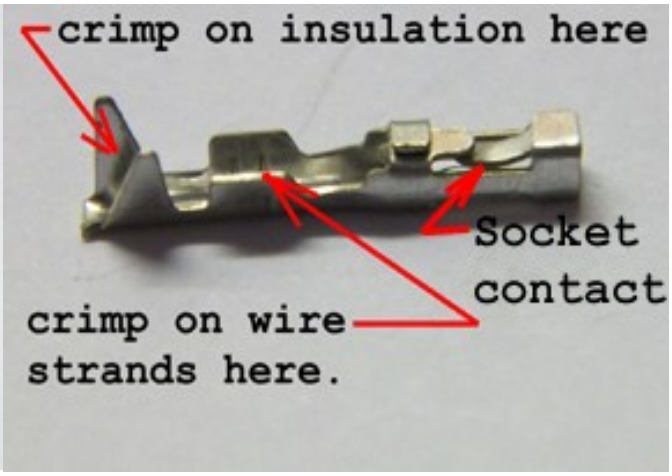

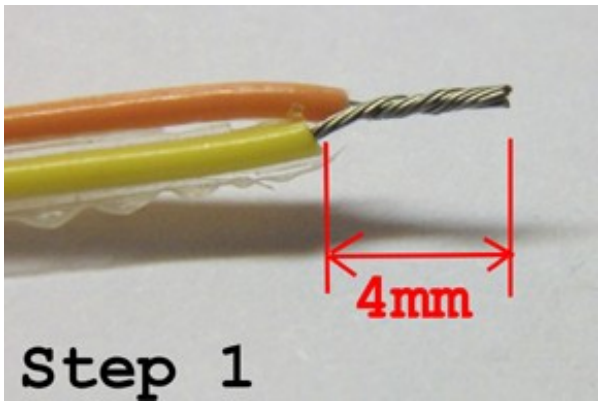

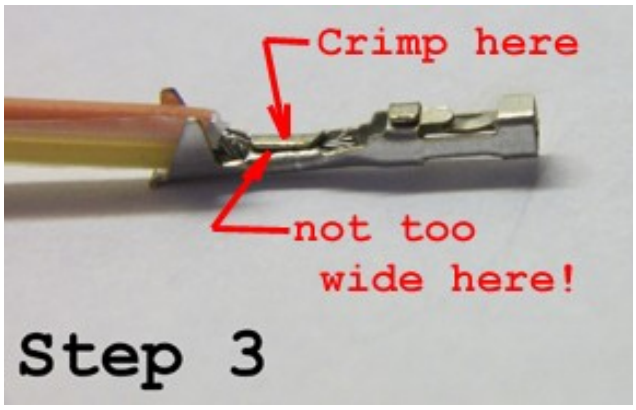

Insert the terminals into the Connector housing.

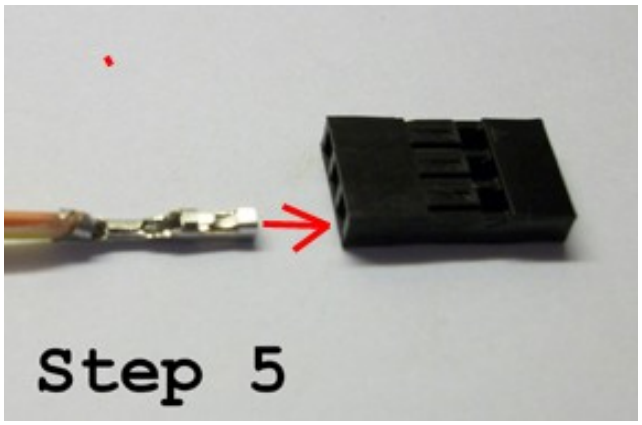

9)The main 30 position IDC connector.

The ribbon will come with main 30 position IDC connector already installed.
See color code and numbers in table on page 2

NOTE: PIN 30 IS BLOCKED IN THE CONNECTOR AND PIN 30 ON THE PCB HEADER SHOULD BE CUT OFF TO INSURE RIGHT ORIENTATION

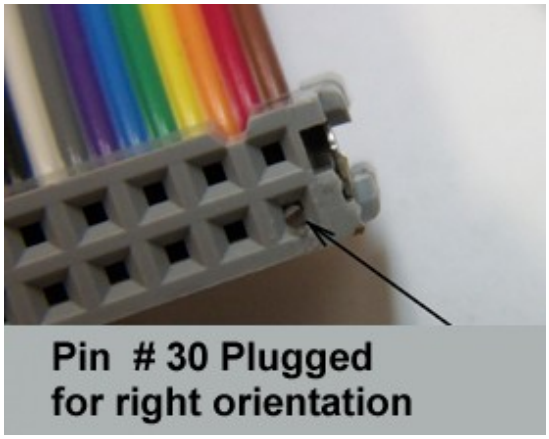

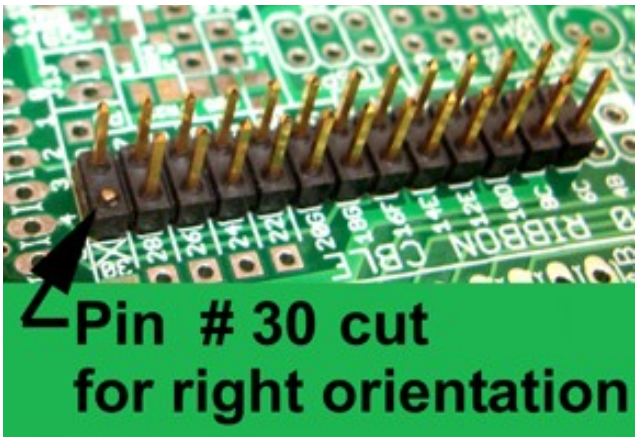

This document was last updated on 06/09/2012
TJ Snyman,ChemShapes , snyman@cfl.rr.com,Please contact me for any errors .